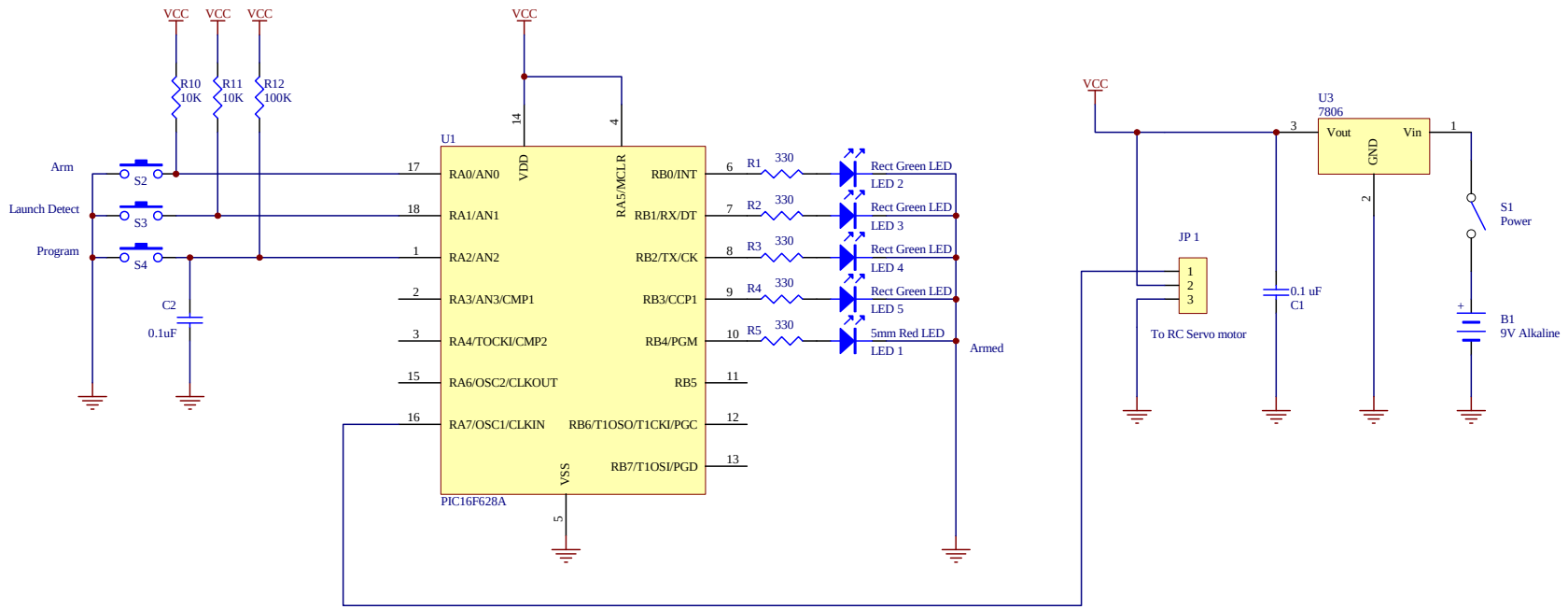

Title	Water Rocket Flight Computer	
Size B	Number	Revision V 1.3.2
Date: 16-Sep-2007	Sheet of 1/1	
File: G:\Flight Computer\..\Flight ComputerV1_3.Sch	Drawn By: George Katz	